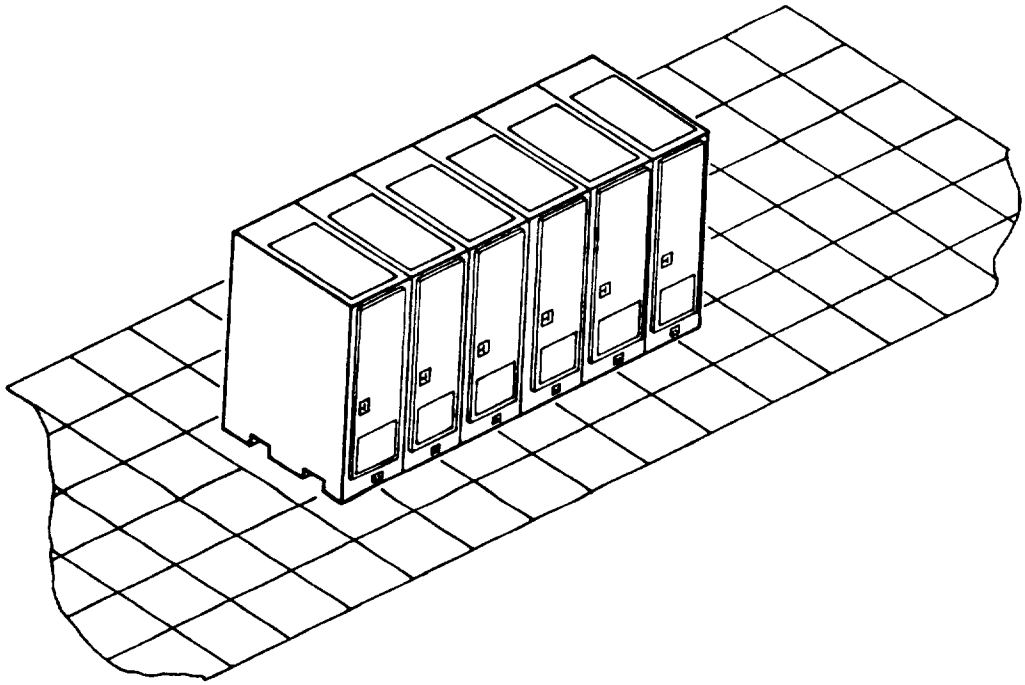

GENERIC RADAR DISPLAY SYSTEM (GRDS), DEVICE 20F15A/10

TRAINING CATEGORY:

SURFACE OPERATIONS (SHIP)
(CIC/Command Control - Ship)

ORIGINATING AGENCY:

NAVSEA

SECURITY CLASSIFICATION:

Device 20F15A/10 (GRDS) is unclassified

PURPOSE:

To provide realistic training and practice by supplying simulated radar signals for up to two (2) types of radars simultaneously in Combat Information Center (CIC) mockups from data supplied by the Environmental Generation and Control System (EGCS).

INTENDED USE:

To train Naval personnel with varying degrees of proficiency in the use of radars by providing real-time simulated radar video to drive radar scopes in a CIC mockup.

FUNCTIONAL DESCRIPTION:

Device 20F15A/10 (GRDS) consists of six (6) cabinets. Each cabinet contains two (2) Power Supply Assemblies and four (4) independent Video Generator Assemblies. Each Power Supply Assembly provides power to two (2) of the Video Generator Assemblies. The assemblies are designed so that a defective unit is easily removed and replaced by another unit; therefore, the impact on training is minimized by a failed unit.

Device 20F15A/10 (GRDS) serves as the integral link between the Environmental Generation and Control System (EGCS) and the mockup CIC's in place at the training complex. Each of the Video Generators provide both normal and Moving Target Indicator (MTI) video to stimulate the radar scopes in the CIC mockups. Device 20F15A/10 (GRDS) operates under the control of the EGCS.

Each Video Generator receives its control data over an Ethernet network from the EGCS. Four (4) Multibus Single Board Computers (SBC) process the data which is used to generate up to 2,000 targets in a high density mode, 400 of

which may have Identification Friend or Foe (IFF) associated with them. The data is also used to produce up to nine (9) ellipses, two (2) jammers, and a landmass boundary. The ellipses are used to simulate weather, seastate, and chaff. Device 20F15A/10 (GRDS) provides as output all the signals necessary to stimulate the AN/UPA-59 IFF Decoders and AN/SPA-25 Plan Position Indicators (PPI) in conventional mockup CIC's, as well as Plan Position Indicator display consoles in Naval Tactical Data System (NTDS) mockup CIC's.

PHYSICAL INFORMATION:

Size:

Each GRDS Cabinet - 25" x 50" x 78"
All six (6) cabinets - 144" x 50" x 78"

Weight:

Each cabinet fully loaded - 1,200 lbs.

POWER REQUIREMENTS:

Video Generator Power No. 1:
120V, 25A, 60 Hz, 1-Phase

Video Generator Power No. 2:
120V, 25A, 60 Hz, 1-Phase

Utility Power:
120V, 20A, 60 Hz, 1-Phase

Blower Motors (Running):
120V, 8A, 60 Hz, 1-Phase (17A startup)

INSTALLATION REQUIREMENTS:

Floor Loading: 180 lbs. per Sq. Ft.

Air Conditioning: Temperature - 68° - 84° F Dry Bulb

Humidity: 60% ± 10%

PUBLICATIONS FURNISHED:

1. Operation and Maintenance Instructions With Parts List, Organizational & Intermediate Maintenance Levels, Generic Radar Display System (GRDS) Device 20F15A/10 (GRDS), NTSC P-5669. (U)

2. Planned Maintenance System (PMS) Cards, Generic Radar Display System (GRDS), Device 20F15A/10 (GRDS), NTSC P-5670. (U)

3. Maintenance Qualification Manual, Generic Radar Display System (GRDS) Device 20F15A/10 (GRDS) Instructor & Student Volumes, NTSC P-5671. (U)

PERSONNEL:

Operator: Instructor-Operated

Maintenance: Per Applicable Contractor Operation and Maintenance of Simulators (COMS) contract.

CONTRACT IDENTIFICATION:

Manufactured by AAI Corporation, Hunt Valley, MD under NAVTRASYSCEN Contract No. N61339-86-C-0126.

LOCAL STOCK NUMBER:

6940-LL-C00-6807

Reproduction of this publication in whole or in part is permitted for any purpose of the United States Government